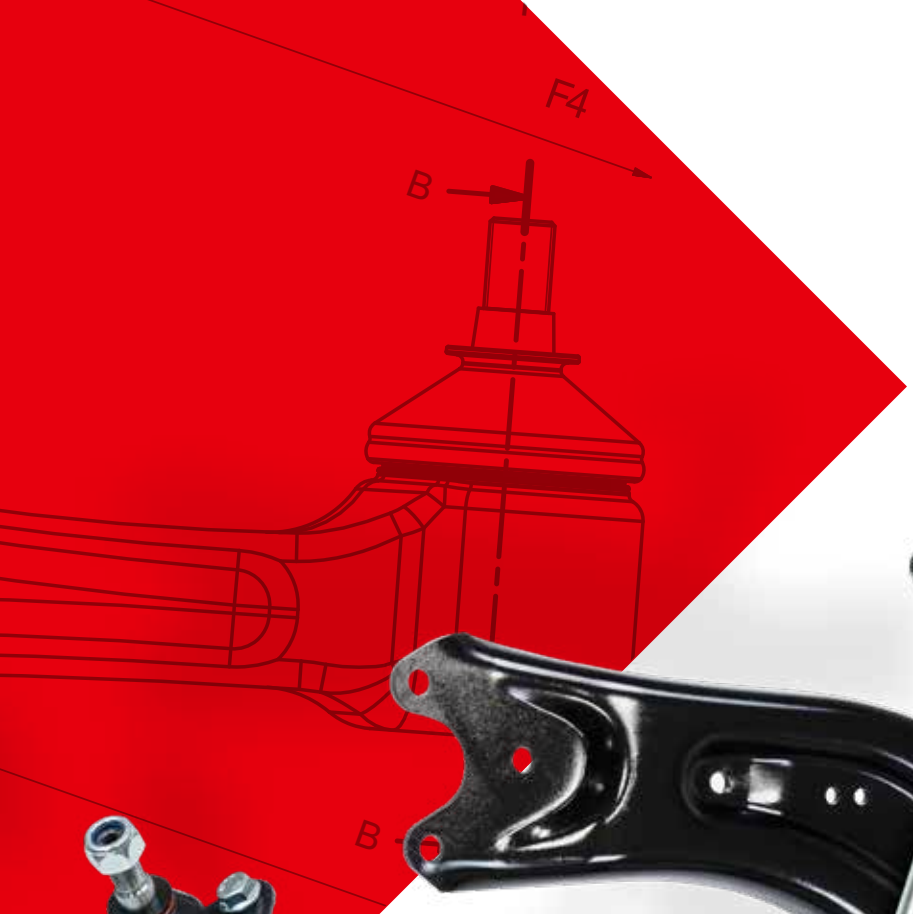

Steering You Through Life

with febi Steering & Suspension

SOLUTIONS
MADE IN GERMANY

www.febi.com

bilsteingroup®

Steering You Through Life

with febi Steering & Suspension

Life is a journey. It's not always straightforward, with challenging curves and blind bends along the way.

Handling these obstacles can be testing, but no matter how bumpy the road may be at times, there are always turning points that can steer your life into an exciting new direction.

To assure you are safe and comfortable along this journey, it is important to have a reliable partner; one that understands the path ahead and will guide you with confidence and precision.

With febi, only the best quality is offered – steering you through the twists and turns in life, wherever it may take you.

Trust febi Steering & Suspension parts!

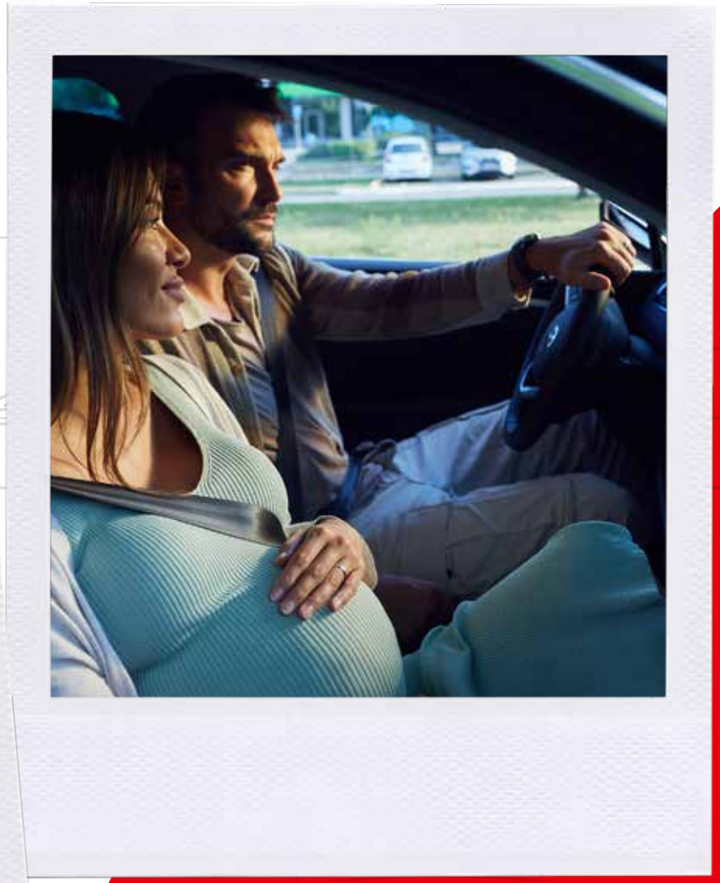

Scan the QR code to watch the febi "Steering You Through Life" film or visit **steering.febi.com**

Your No.1 for Steering & Suspension

Steering components are subject to special care in design, production and assembly. In order to maintain stable road handling in unpredictable conditions, all installed parts must be of the highest quality.

febi is a byword for steering and suspension products that satisfy the highest demands of manufacturing quality and installation reliability. Trust in your No.1 for quick and efficient repairs.

We also set standards in terms of our programme: in the steering and suspension sector, febi provides one of the largest passenger car product ranges in the Independent Aftermarket.

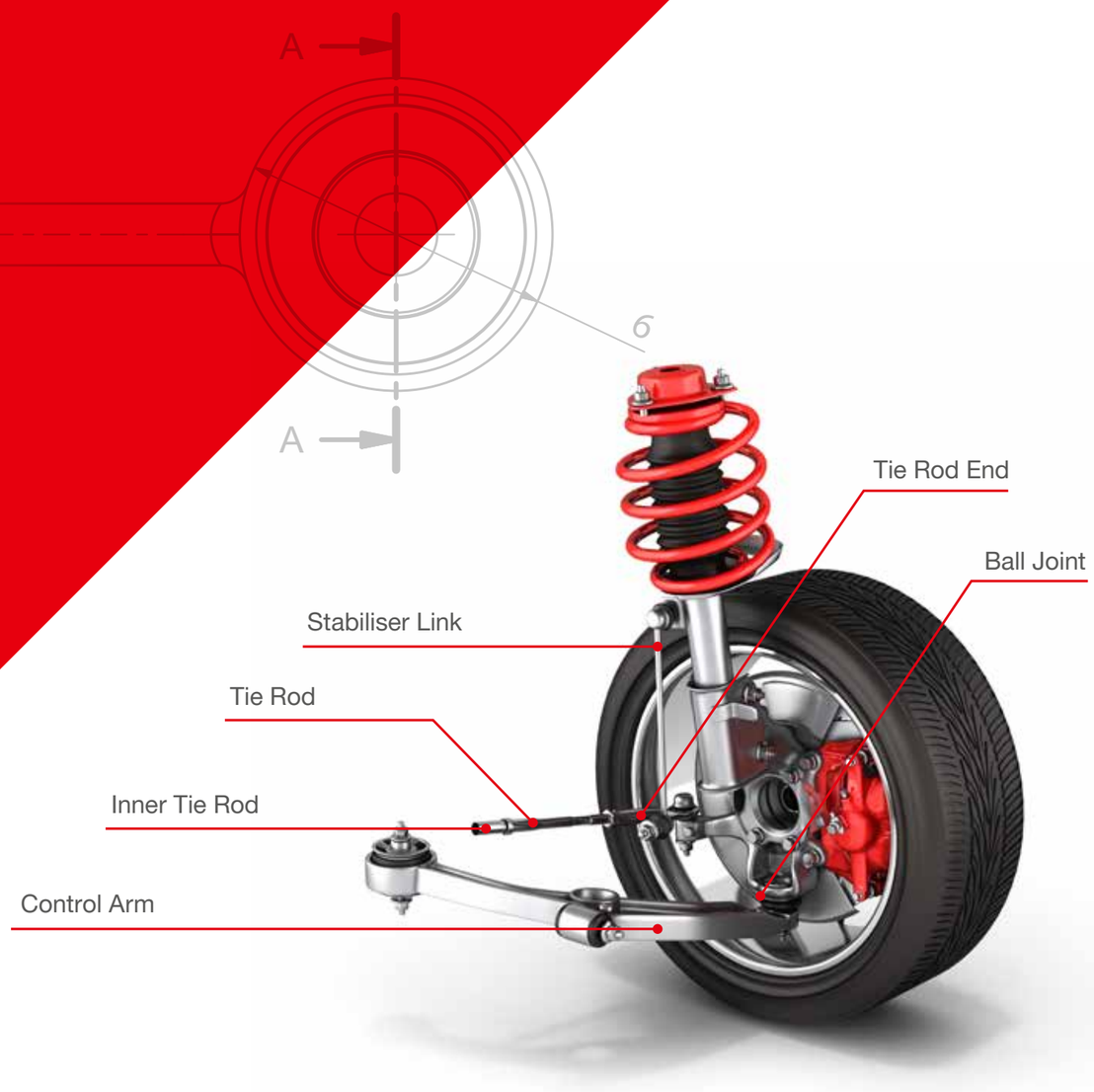

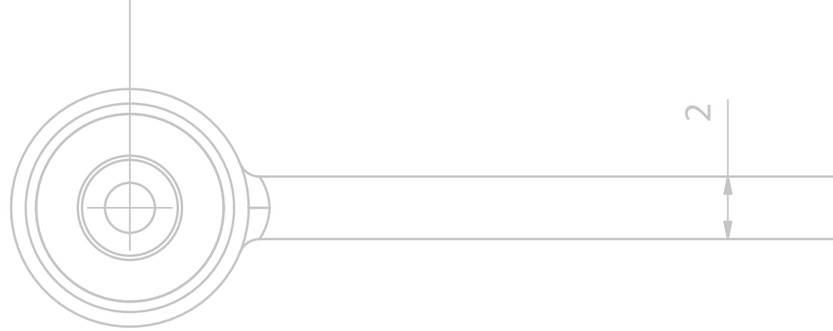

Benefits at a Glance

Right Range - febi provides one of the widest steering and suspension ranges with more than 10,00 articles to cover all popular European and Asian vehicle types. In addition, due to a Fast to Market approach, febi maintains constant research and development to ensure it provides the right parts at the right time.

Highest Quality - febi is a byword for steering and suspension products that satisfy the highest levels of manufacturing quality and installation reliability. With OE matching quality and intensive testing, febi guarantees that the products inside the box are of the finest standard.

Matching to OE - steering parts from febi precisely match the OE specification without any modifications to the intended and original design. This ensures that febi products are exactly as created by the vehicle manufacturer, providing a full level of comfort and safety to the vehicle owner.

In-house Production - bilstein group Engineering, our in-house manufacturing facility, use their expertise and top-quality machinery to produce selected steering and suspension components. febi is widely recognised for having the correct know-how and manufacturing competence.

febi Prokit - with more than 2,750 steering and suspension ProKits in range, febi offers an innovative and tailored solution. By providing kits which include all of the necessary parts (e.g. control arm bearings, mounting brackets, ball joints, spring lock washers) for quick and efficient repairs, workshops will save both time and money.

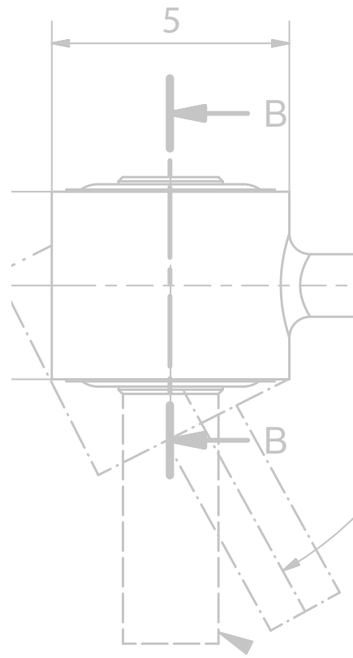

Your No. 1 for Steering & Suspension

Quality by Conviction

Care at Every Step of the Process

One of febi's greatest strengths is reliability. This is ensured both with punctual product delivery and, above all, consistent product quality. At the same time, constant quality standards apply, which are assured with comprehensive, repeatedly performed product checks – from initial sample tests through to detailed incoming goods inspections.

These continuously challenge and reconfirm the claim of OE matching quality asserted for every steering and suspension component. Steering and suspension parts from febi comply precisely with the product standards of the respective original equipment suppliers, making us your strong partner in the Independent Aftermarket.

100% Testing

In order to ensure absolutely reliable absorption of the vertical and horizontal forces occurring during acceleration, braking and cornering, all steering and suspension components are subjected to intensive testing. Only completely flawless products are accepted into the febi range.

A team of specialists submit every sample part to extensive tests in a specially equipped laboratory. For example, all control arms are measured beforehand with a 3D scanner. On the basis of so-called "false colour images", the parts can then be compared with their OE equivalents, making every deviation visible.

Exceeding Requirements

Rubber-to-metal components, such as control arm bearings, are checked with the help of a Zwick Roell tensile testing machine. The focus of performance tests includes measuring the stiffness, engagement force and release load. Welded joints are not only visually inspected, they are also checked for stability as per DIN ISO 5718 on the basis of cross-sectional views.

With the numerous test procedures that span several days per examined product, febi ensures that all supplied steering and suspension parts exhibit 100% driving stability and either meet or exceed the respective approval requirements.

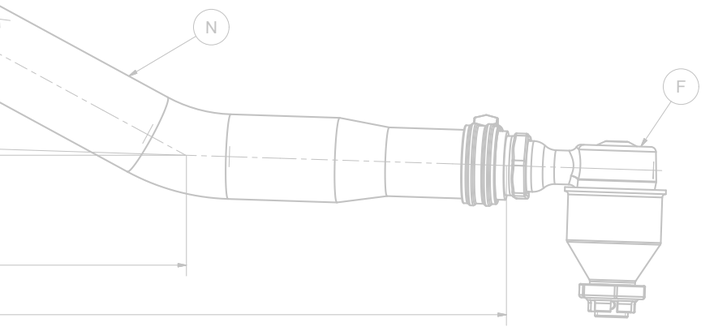

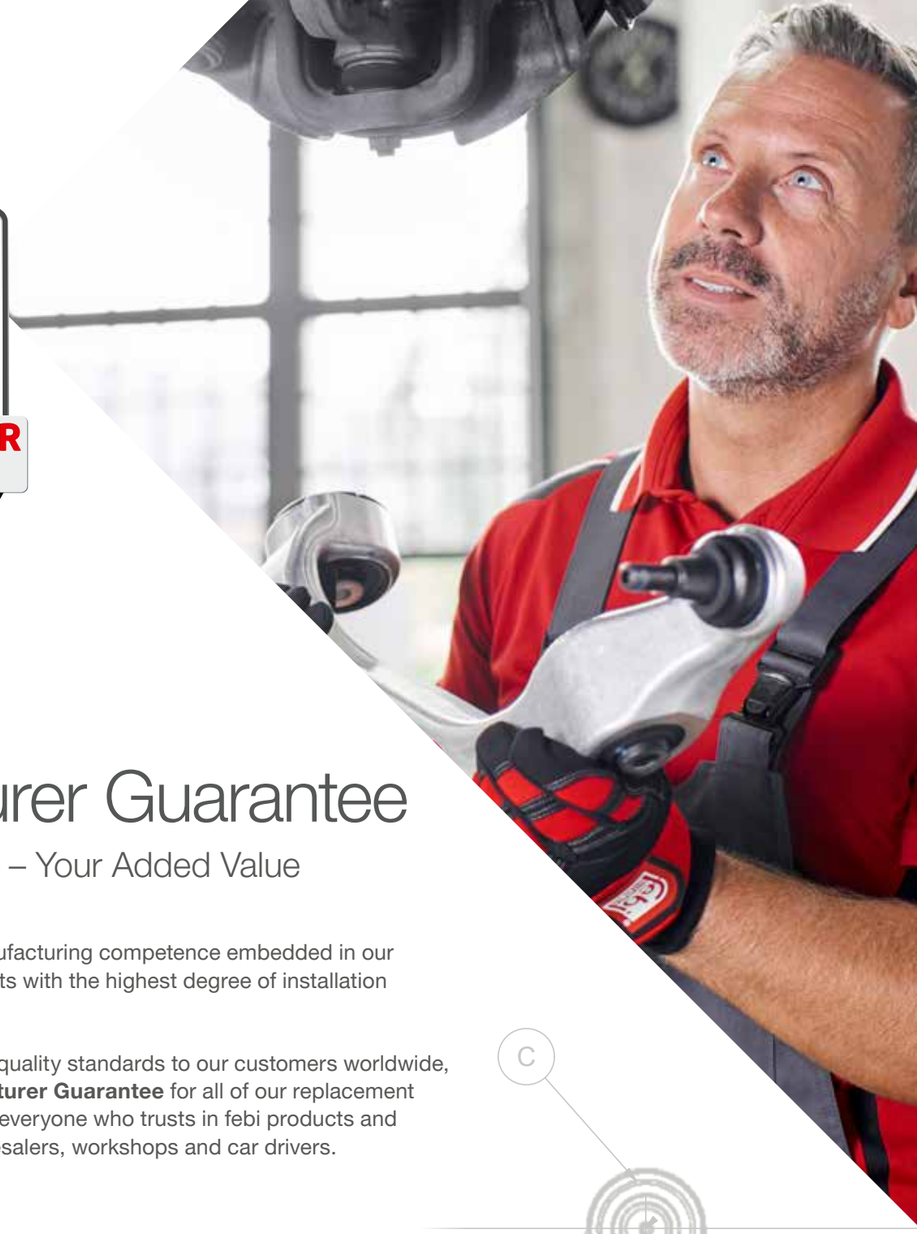

The febi Manufacturer Guarantee

Our Quality Promise – Your Added Value

As a parts specialist with manufacturing competence embedded in our history, febi only offers products with the highest degree of installation safety and durability.

To underline our high product quality standards to our customers worldwide, we provide a **3 Year Manufacturer Guarantee** for all of our replacement parts. This is a real benefit for everyone who trusts in febi products and provides added value to wholesalers, workshops and car drivers.

Manufacturing Competence

We have a very long heritage in the metal processing industry dating back to 1844.

As a result, our in-house manufacturing facility - bilstein group Engineering - manufacture hundreds of steering and suspension components for febi.

All components go through a stringent 3-stage inspection process (against the OE equivalent) to ensure that they meet the high bilstein group quality standards.

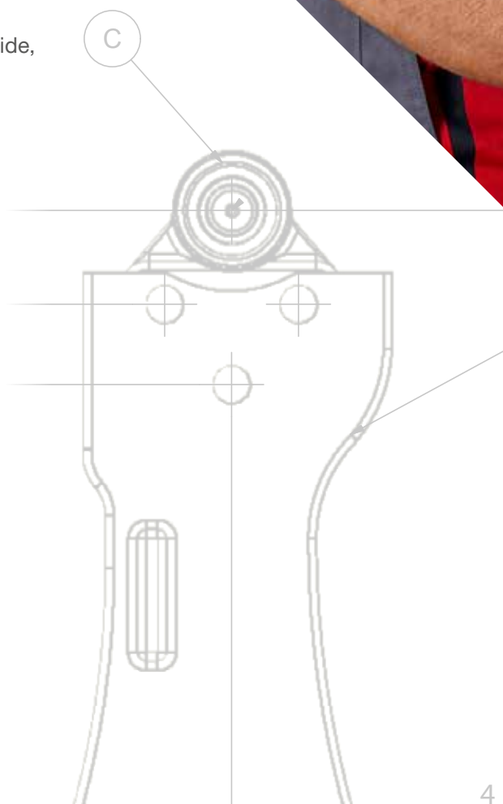

Ball Joint Production and Structure

Guiding you through every twist and turn in the road

The ball joint is a critically important part of every vehicle's suspension system. This vital multi axial-connecting component is a feature of most control arms, stabilizer links, tie rod and tie rod ends. Its purpose is to be the connecting point to the vehicle's steering and suspension system to the road wheels. The spherical ball pin and socket design of the ball joint enables the suspension to travel up and down as the road surface conditions continually change, as the vehicle is driven through the twists and turns of the road. febi ball joints are produced with high quality materials, in accordance to the original equipment standards, for optimum performance and durability. This ensures accurate wheel alignment, eliminating suspension noise and improving chassis handling.

Clamping rings

Spring steel clamping rings ensure the security of the rubber boot - supporting the static and dynamic sealing areas of the ball pin.

Protective rubber boot

The Chlorophene rubber boot is one of the most important components of a ball joint. The boot ensures that the ball joint assembly is protected against moisture, road debris and is resistant to heat, oil and weathering from the direct effects of sunlight. It is able to seal the joint in every position of the ball pin and at any angle of deflection.

Ball pin

febi ball pins are manufactured in line with the original equipment specification, meeting the required load demands of each steering and suspension joint. The light alloy steel used has increased wear resistance, surface hardness and service life - through creation of a hardened surface layer while maintaining an unaffected core microstructure. This produces a ball joint which is harder, stronger and safer - resulting in the required strength for the safety of the driver and passenger/s; achieving greater vehicle agility, stability and driving dynamics.

Steel cap

To finalise the assembly of the ball joint components, the steel cap - which is resistant to impact and corrosion - is sealed in place by a rolling process applied to the edges of the ball joint housing, protecting the parts inside.

High performance grease

The grease used by febi has been specifically designed for the lubrication of smooth-running ball joints. The semi-synthetic base oil is thickened with polyuria and is free of heavy metals and black solid lubricants. Special additives are used to increase adhesion to steel and plastic components, which improves the dampening effect between the friction bodies.

Casting/housing

The ball joint housing is designed precisely to meet the load and function requirements of each application. This can be as a suspension ball joint - bolted or riveted to the control arm - or where a ball pin is pressed into the ball joint housing and fixed on one side across the geometry of the ball joint. The other side is secured by a retaining ring, or as a built-in ball joint (used in many forged and cast control arms and links).

Acetal bearing

Polyoxymethylene (also known as acetal, polyacetal or polyformaldehyde) is an engineering thermoplastic used in precision steering and suspension parts, which require high stiffness, low friction and excellent dimensional stability, ensuring smooth axial movement.

Control Arms

An Alignment for Maximum Stability

The control arm is the mechanical link between the suspension strut and body and therefore is one of the most important functional components for passenger cars. At the same time, control arms also ensure correct wheel alignment. They hold the suspension strut in position and absorb forces in longitudinal and transverse directions during acceleration, deceleration and cornering.

Since the control arm is a safety-relevant wear part that sooner or later has to be replaced on every passenger car, this component is subjected to very exacting tests, especially by the TÜV (German Association for Technical Inspection). In these examinations, the control arm is one of the most frequently faulted parts.

Control arms from febi are characterised by precise workmanship, high-grade materials and use high-quality ball joints and bearings with the correct rubber hardness.

With a common alignment and a range of over 1,650 control arms in OE matching quality, febi offers maximum stability for the road, in the repair shop and in business.

febi Control Arms and Ball Joints at a Glance:

- OE matching quality
- More than 2,150 references of Control Arms and Ball Joints
- Also available as a repair set

Ball Joints

Safety and Quality Combined

The supporting ball joint connects the control arm to the suspension strut. The main task of the ball joint is to support the steering knuckle and to hold the widely-used McPherson strut in position at the base. As a safety-relevant component, the ball joint must absorb the forces exerted during braking, acceleration and cornering.

A defective component makes its presence felt with clicking or knocking noises from the front axle. The major cause of failure are the protective rubber boots that allow dirt and moisture to enter the joint. This leads to corrosion and ultimately to play in the joint. It can also result in imprecise steering and an unevenly worn tyre tread pattern. When replacing the ball joint, attention must always be paid to ensuring that the surrounding components, such as the axle boot, are not damaged. After replacement, the need may arise for wheel alignment, which must be conducted according to the manufacturer specifications.

febi makes an important contribution to road safety with up to 500 high-quality ball joints ensuring customers can always rely upon our products.

Tie Rods

Perfect Connection Guaranteed

Tie rods connect the steering gear to the crossmembers of the front wheels and ensure that both wheels turn together and maintain a specific angle relative to each other.

Changing the tie rod is necessitated by wear of the tie rod end or inner tie rod end (if these components are not available separately). Another reason could be deformation of the tie rod caused by shocks such as driving over potholes, excessive kerb contact, or an accident.

The functional dimension, i.e. the required length, of high-quality febi tie rods corresponds precisely to the original. If the length differs from that specified by the vehicle manufacturer, problems could arise during wheel alignment.

febi tie rods guarantee a perfect connection in the steering and suspension area. febi also guarantees this perfect connection in its everyday cooperation with you. With over 450 articles in its tie rod range, febi is the leader in the Independent Automotive Aftermarket.

Tie Rod Ends

Precise Control of Your Destination

The outer tie rod end transfers the movement from the steering wheel to the wheels and allows the wheels to move relative to the vertical axis. In order to be effective, the steering system has to turn the wheels at the same rate and along the same plane in any condition of both the car and the road. A worn tie rod end can result to abnormal wear patterns on the tyres and erratic steering feel.

The rubber boot is vitally important for a long service life: in order to avoid corrosion and play in the joint, febi only uses the highest quality Chlorophene rubber . The correct material hardness of the mating surface with the crossmember is ensured by our certified quality management system.

febi provides an extensive range of more than 850 OE-matching quality tie rod ends for precise vehicle control - ensuring your customers always arrive safely at their destination.

febi Tie Rods and Tie Rod Ends at a Glance:

- OE matching quality
- More than 1,300 references of Tie Rods and Tie Rod Ends
- Also available as a ProKit with steering boots

Inner Tie Rods

Always on Track

The tie rod consists of an inner tie rod and a tie rod end. The inner tie rod is connected to the steering. The main function of this part is to convey the steering motion to the wheels. This keeps the vehicle in the right lane.

A typical sign of wear is play in the ball joint. This can occur, for example, if the plastic shell of the ball socket is worn.

One frequent reason for this unequivocal defect is repeated and excessively hard mounting of kerbs.

As a pioneer in the Independent Automotive Aftermarket, febi and its inner tie rods ensure that repair shops and the trade always keep on track. With over 550 articles in range and coverage of 97% of popular vehicle types, febi leads the way.

febi Tie Rods and Stabiliser Links at a Glance:

- OE matching quality
- More than 1,450 references of Inner Tie Rods and Stabiliser Links
- Predominantly available as a ProKit

Stabiliser Links

The Basis for Optimal Dynamics

The stabiliser link – also referred to as a sway bar link – is an important component for the driving dynamics of a passenger car. It connects the stabiliser bar to the body and as a part of the suspension, stabilises the vehicle especially when cornering by reducing roll, i.e. the tilting of the body structure towards the outside of the curve.

If knocking noises can be heard on uneven road surfaces from the front axle area, this could be a sign of a defective stabiliser link. It can usually be replaced without much effort and subsequent wheel alignment is normally not required.

As well as improving vehicle dynamics, it also optimises dynamics within the workshop. febi provides the basis for this with more than 1,000 vehicle-specific stabiliser links that are mostly available as complete repair sets and ProKits.

febi ProKit

Complete Kits. Non-Stop Repairs.

As an everyday workshop repair, it is often the case that not only the wear part, but also its fitting materials, need to be replaced. However, these additional articles – mostly nuts and bolts – are not often included with the individual replacement part.

With over 2,750 Steering and Suspension ProKits available, febi provides a remedy by offering appropriate assembly kits, particularly for steering and suspension components, which include all the necessary mounting parts (e.g. control arm bearings, mounting brackets, ball joints, spring lock washers, etc.) for quick and efficient repairs.

febi ProKit is the tailor-made total solution with which required repairs can be completed without delay.

febi ProKits for Steering and Suspension:

- Anti-Roll Bar
- Axle Bearing
- Ball Joint
- Control Arm
- Control Arm Mount
- Guide Link
- Integral Linkage
- Stabiliser
- Stabiliser Link
- Stabiliser Mount
- Strut Mount
- Tie Rod
- Tie Rod End

febi PROKIT

Quality in Focus

Our claim to have a consistent quality of parts across the entire range can be demonstrated with the febi ProKit. The high quality standards apply to all connecting materials, not just the main wear parts.

Nuts, bolts and clamps are exclusive to vehicle manufacturers, however just like any other febi product, these additional small components (included with ProKit)
comply with the original quality standards and fit exactly the same.

Anti-Roll Bar ProKits

Road debris, salt and other external factors are frequent causes of damage to the anti-roll bars‘ coating. When the bar is impaired, squeaking noises are a typical sign of wear. When the painting around the mounting points is harmed, the part will need replacing - as will the rubber mounts.

febi’s range of anti-roll bar ProKits are a tailor-made solution. We offer assembly kits which include all of the necessary mounting parts (e.g. bushes, stabiliser links, nuts, bolts and brackets) so that repairs can be completed without delay.

febi offers a market leading range of anti-roll bar ProKits manufactured in OE matching quality for a wide range of popular vehicle makes and models.

This will save time and money for both the workshop and their customers!

Technical Information

Know-How for Workshops

Another added-value service provided by febi is the provision of technical information. These documents offer support and best practice solutions for the automotive workshop.

PROTIPS
Important workshop information, regarding optimised repair solutions or new product lines, explained clearly and precisely.

INFO
A product-related bulletin which is enclosed (in the packaging) alongside the respective replacement part, providing the workshop with important installation information.

All the bulletins are linked to the relevant parts in our electronic catalogue.

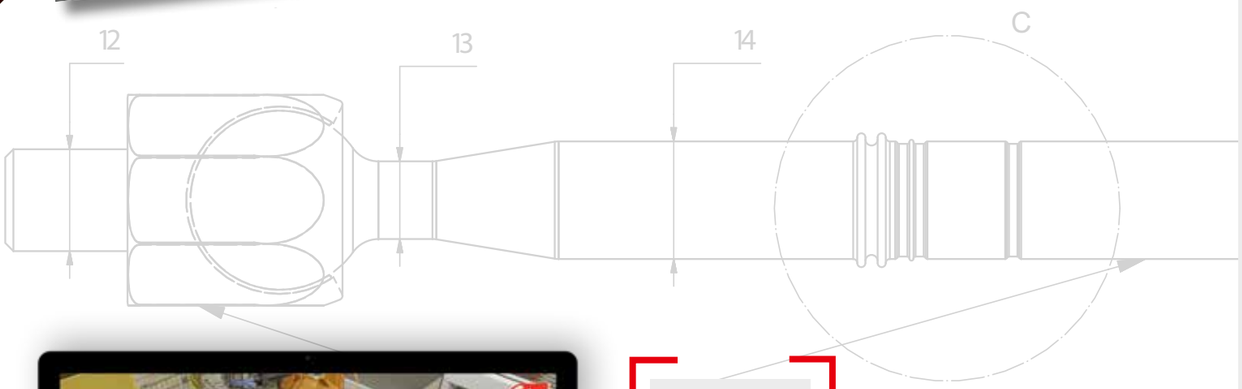

Scan the QR code to watch the new febi Steering & Suspension product video or watch it online at:
youtube.com/ferdinandbilstein

bilsteingroup®

partsfinder

SEARCHING BECOMES FINDING

One search system for the complete ranges of febi and the other bilstein group brands

partsfinder provides direct access to over 60,000 replacement parts from the bilstein group. You can find the component you are looking for with just a few keywords.

Simple Direct Search
Search field makes finding results easy and effective

Detailed Product Information
Including repair set references & safety data sheets

Customized Article Lists
Combine individual articles & print them as a PDF

Expert Filter
Find your parts even easier

B2B-Shop
Check availability of any article (selected customers only)

FANS
Future Article Notification System

The new feedback tool for bilstein group partsfinder users

Register now for free
partsfinder.bilsteingroup.com

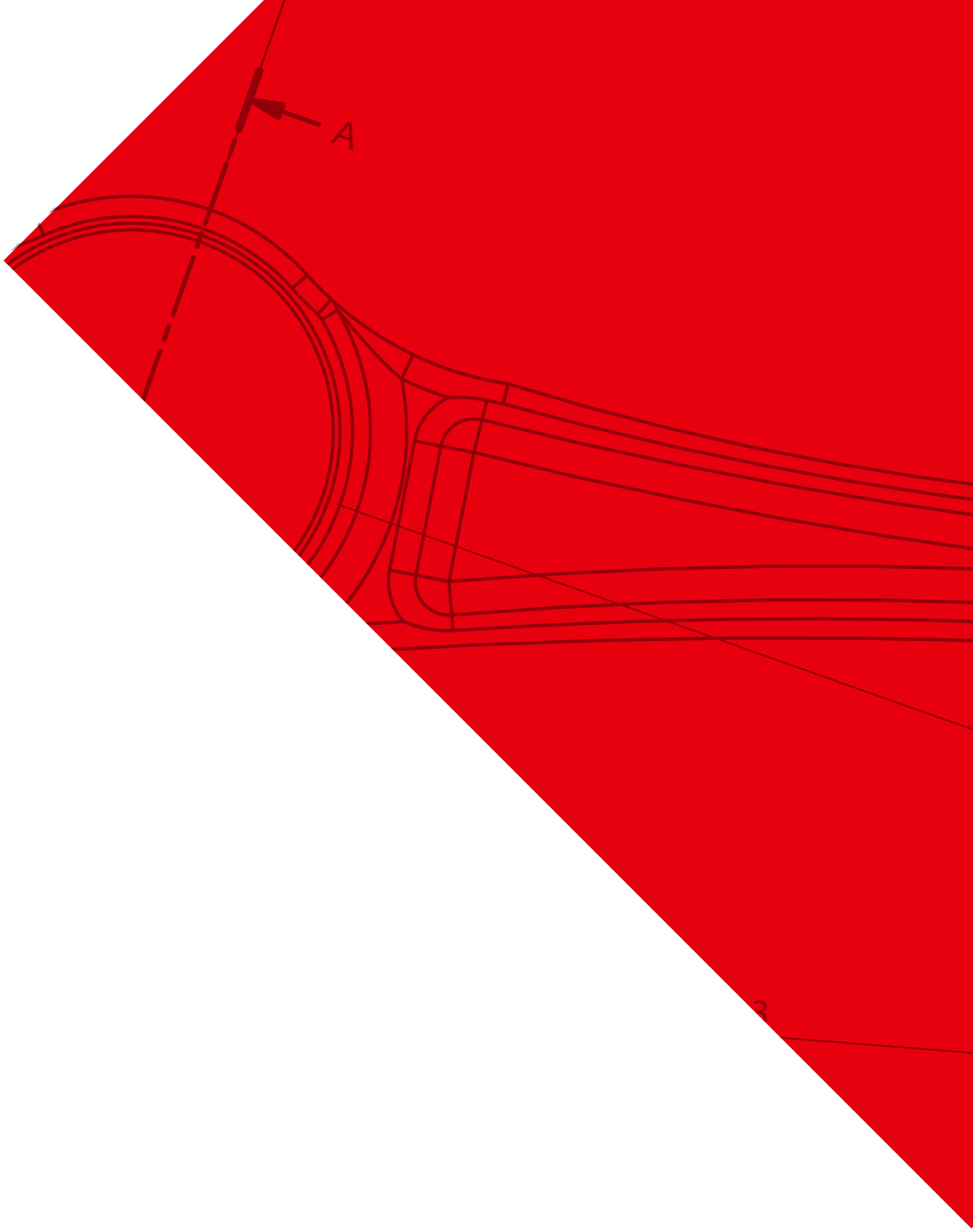

Ferdinand Bilstein GmbH + Co. KG
Wilhelmstraße 47 · 58256 Ennepetal · Germany
Tel. +49 2333 911-0
Fax +49 2333 911-444
E-Mail info@febi.com

FCAM001/EN/10.2021